Confederation of European Waste-to-Energy Plants

Heat Delivered to Your Doorstep

Mobile Heat Storage Developed at the Waste-to-Energy Plant in Hamm (Germany)

Heat storage tank transported by truck

Waste-to-Energy plant in Hamm

The Waste-to-Energy plant in Hamm (Germany) has started an innovative project that will deliver heat directly to your doorstep. A prototype mobile heat storage unit has been designed and built to make this heat delivery possible.

The use of mobile heat to supply energy for a remote location is an excellent way to improve the energy efficiency of an existing process, and it is the perfect solution where a pipeline connection cannot be realized cost-effectively.

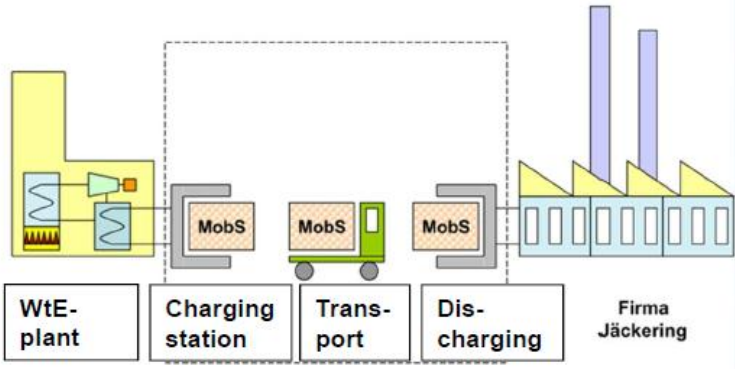

In a pilot project, a Waste-to-Energy plant (incineration with energy recovery) provides the source of heat. At the heat demand site, the mobile storage is discharged into an industrial drying process. The project will be tested over a period of one year.

The main goals of the project are to demonstrate the viability and determine the costs of a mobile heat storage process based on an open-cycle sorption system. Mobile heat using energy from waste may be a competitive substitute for conventional energy if high energy storage capacities (200 storage cycles per year) and low investment costs for the mobile storage system can be realized. A feasibility study predicted that the cost of heat generation using this method could be in the region of 50 €/MWh.

General information on the Waste-to-Energy plant in Hamm, Germany
Four incineration lines process approximately 295,000 tonnes (8,800 kJ/kg) of residual waste per year. The plant generates around 130,000,000 kWh electricity and exports around 124,000,000 kWh heat annually.
For more information: http://www.mva-hamm.de or http://www.mobile-waermespeicher.de